LS/LB series LARGE CAPACITANCE

Item	Characteristics	
Operating Temperature Range	- 40~85°C	- 25~85°C
Rated Working Voltage Range	10V~100V DC	160V~450V DC
Capacitance Tolerance (120Hz,25°C)	±20%(M)	
Leakage Current (25°C)	I≦0.03CV or 30(μA) I: Leakage Current (μA) C: Rated Capacitance(μ F) V:Working Voltage(V) After 5 minutes applying the DC working voltage	

Surge Voltage (25°C)

W.V.	10	16	25	35	50	63	100	160	200	250	350	400	450
S.V.	13	20	32	44	63	79	25	200	250	300	400	450	500

Disspation Fator (120Hz,25°C) (Tan.θ)

W.V.	10	16	35	50	63	100	160	200	250	350	400	450
S.V.	0.35	0.35	0.25	0.25	0.25	0.20	0.20	0.20	0.20	0.20	0.25	0.25

For capacitance exceeding 1000 μF, add 0.02 per increment of 1000 μF

Temperature Characteristics

W.V.	10~100	160~450
-25°C /+25°C	4	8
-40°C /+25°C	12	/

Impedance ratio at 120Hz

Load Test

After 1000 hours application of W.V. at +85°C
the capacitor shall meet the following limits

Capacitance change	≦±20°C of initial value
Tan.θ	≦±150°C of initial specified value
Leakage current	≦initial specified value

Shelf Test

After 500 hours application of W.V. at +85°C
the capacitor shall meet the following limits

Capacitance change	≦±200°C of initial value
Tan.θ	≦±200°C of initial specified value
Leakage current	≦200% of initial specified value

LS SNAP-IN TERMINAL

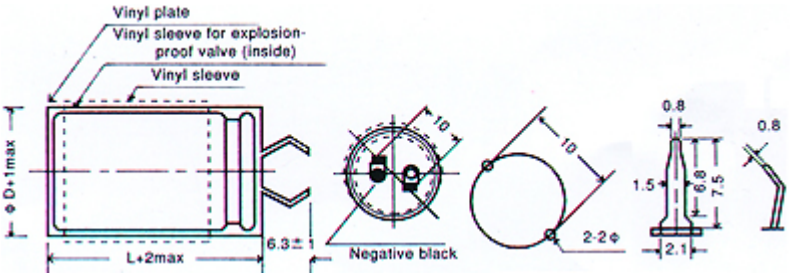

LB LUG TERMINAL

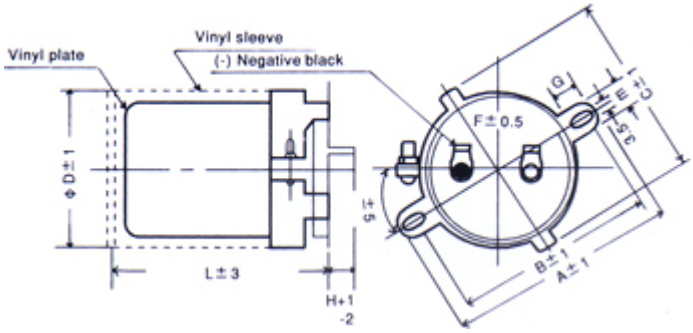

Case diameter(ø D)	A	B	C	E	F	G	H	O
25	48	38	33	10	10	6	12	45
30	52	42	38	10	14	6	12	45
35	58	48	46	10	14	7	12	45
40	64	54	50	10	14	7	12	45

LS series SNAP-IN TERMINAL

DxL(m/m)

µF\WV	16		25		35		50		63		80		100	
3300											30x42	2700	30x52	3100
4700									25x40	2950	30x52	3000	35x50	3150
6800							25x40	3200	25x50	2300	35x52	3580	35x62	3750
10000					25x40	3200	30x52	4250	30x50	3650	35x60	4350	40x62	4650
22000			30x52	4150	30x52	4250	35x62	5680	35x62	4500				
33000	30x40	4150	35x52	5050	35x62	5680								
47000	35x52	5150	35x62	5680										

µF\WV	160		200		250		350		400		450	
220			22x32	900	22x36	1050	22x42	1100	22x42	1200	25x40	1000
330	22x32	1000	22x32	1200	22x40	1450	30x45	1430	30x45	1500		
470	22x35	1440	22x40	1630	25x41	1800	30x52	1960				
680	25x40	1850	25x45	2000	30x45	2310						
1000	30x45	2400	30x45	2700								

LB series Dimensions

µF\WV	16		25		35		50		63		80		100	
3300											30x52	2750	30x52	3200
4700									25x40	3000	30x52	3100	35x62	3450
6800							25x40	3250	25x50	3560	35x52	3680	35x62	3950
10000					25x40	3300	30x52	3500	35x52	3950	40x62	4350	40x62	4650
22000			30x52	4250	30x52	4350	35x62	4500	40x62	4720				
33000	35x35	4250	35x52	5150	35x62	5880								
47000	35x52	5250	35x62	5880										